25% Recycled Content

Bike-Shell™ Model 301-ECO

NEW design, one piece FRP Composite bike locker
NO ASSEMBLY required

Lockers are pictured with Part No. 074 – Perforated Steel Safety View Windows

All lockers are shipped assembled and can be stand alone or grouped – NO COMMON WALLS. Lockers easily relocated.

Specify the 300-ECO Series lockers for the highest customer satisfaction from the no-assembly ready-to-use delivery through years of trouble free operation.

Architects, designers and government agencies specify the 300-ECO Series due to the high quality manufacturing which means virtually no installation costs!

- The 300-ECO Series is the first one piece locker available that is not molded of soft and flammable HDPE plastic material.

- The construction of fiberglass reinforced plastic is highly resistant to impact, stains and will not corrode.

American Bicycle Security Company
P.O. Box 7359
Ventura, CA 93006
Ph: (800) 245-3723 or (805) 933-3688
Fax: (805) 933-1865
www.ameribike.com
Email: turtle@ameribike.com

Bike-Shell™ Model 301-ECO

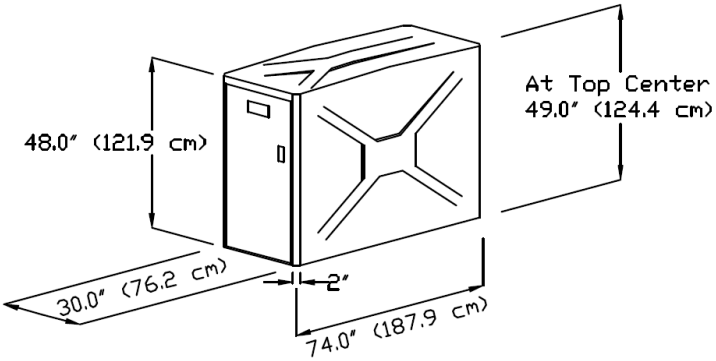

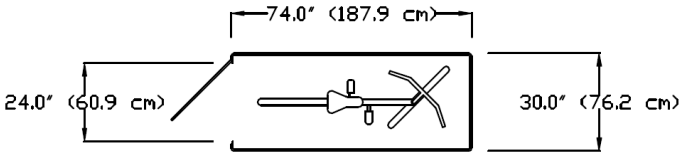

1 door/1 bike

T-Handle

Padlock/U-Lock Handle

Product	Bike-Shell™ Model 301-ECO
Capacity	1 door/1 Bike
Materials	Locker shall be manufactured of molded fiberglass reinforced plastic composite with a smooth "X" and "Y" pattern on stippled walls and top, with smooth door frame and stippled door. Material shall be E-glass and polyester resin at 35% ratio. **MADE WITH 25% RECYCLED CONTENT** Tensile Strength, 18,000 psi. Locker shall be one piece with no external or internal frame and no seams or joints on tops or side walls. Material shall withstand over 300 lb/sqft on roof and 200 lb/sqft on walls/doors. **NO ON SITE ASSEMBLY SHALL BE REQUIRED.** Roof shall be crowned for water run-off and all corners shall have a smooth radiused finish. Finish of UV stabilized gelcoat does not need painting, allows solvent removal of graffiti and is resistant to impact and UV damage.
Setback	Please allow 5ft clearance for door
Hardware	High quality custom continuous door hinge will not rust. All fasteners on locking system shall be zinc plated or better. Locker shall anchor in all four corners through base flanges using expansion anchors. See last page for anchoring details.
Locks	2 Standard Lock Options (No charge) •Fort Lock 7 pin tumbler Pop Out "T" handle locks with three keys and removable lock cylinders. Internal locking hardware consists of three plated hardened steel cams controlling an extruded aluminum locking bar which engages the door frame over three foot span. •Heavy duty stainless steel Padlock/U-Lock handle will accommodate high security Padlocks and U-Locks. For U-Locks from ½" to ¾" Diameter. Padlocks and U-Locks not included.
Colors	2 Standard Color Options (No charge) Tan Medium Grey Please call for custom color, or color match information

American Bicycle Security Company
P.O. Box 7359
Ventura, CA 93006
Ph: (800) 245-3723 or (805) 933-3688
Fax: (805) 933-1865
www.ameribike.com
Email: turtle@ameribike.com

ASSEMBLY INSTRUCTIONS 300 SERIES BICYCLE LOCKER – Model 301-ECO

Your bike locker does NOT require any general assembly.

Tools Needed:

Minimum requirements

- 3/8" electric drill (anchoring & installing diagonal divider wall)
- 3/8" electric rotary hammer drill (anchoring)
- 1/4" drill bit (anchoring & installing diagonal divider wall)
- 1/4" hammer drill bit (anchoring)
- hammer (anchoring)
- Tape measure - minimum 10' (anchoring & installing diagonal divider wall)
- Extension cord 25' (anchoring & installing diagonal divider wall)
- Generator or other source of power (anchoring & installing diagonal divider wall)
- Safety glasses and any other equipment specified by the tool manufacturer. (All Steps)

-Choose location which allows a minimum 4' distance between door face and any obstruction to allow bicycle to maneuver into locker and the door to swing open without hitting high spots such as concrete or asphalt raised by roots. If desired, for grouping of units, chalk a line for straight edge with which to work. A preferred site would be concrete although asphalt can be used. Site should be flat although it does not necessarily have to be level.

ANCHORING

The lockers should be anchored to the ground for optimum longevity and proper operation of the locking system. Therefore, anchoring each unit to the ground is advisable. The 301 and 302 lockers are anchored in the 4 corners of the flange located around the inside of locker, the 301P, & 301V are anchored in the front two corners of the locker and the rear. First square the doors in the frame. Out of square doors are due to the site being uneven. To square the door, using a flat bar, raise the corner of the locker to make the door in square. If any adjustment is necessary it should only be slight. Place a shim under the corner to retain the alignment and height. Shim should be placed in a location under the base flange very close to hole for the anchor. This allows the downward force of the anchor to be supported underneath and prevent cracking of the base flange at the anchor location. Drill through the base flange on the locker with 1/4" drill. With hammer drill and 1/4" masonry bit you can then drill into concrete surface. Drop the nail-in anchor through flange and into the hole, pound pin down flush with top of mushroom head of anchor. Do this at all four corners of door frame on 301 & 302 lockers. On 301P and 301V do this in the front two corners of the door frame and in center of rear wall.

American Bicycle Security Company
P.O. Box 7359
Ventura, CA 93006
Ph: (800) 245-3723 or (805) 933-3688
Fax: (805) 933-1865
www.ameribike.com
Email: turtle@ameribike.com

Bike-Shell™ Model 301-ECO

Anchoring Information

NOTE: Hole position is only approximate and not critical.

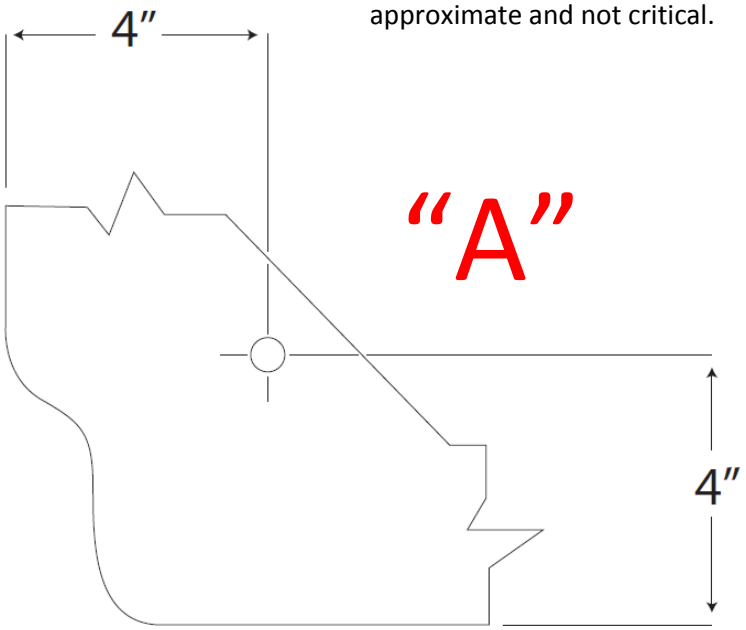

Top View Anchoring Flange Inside Locker

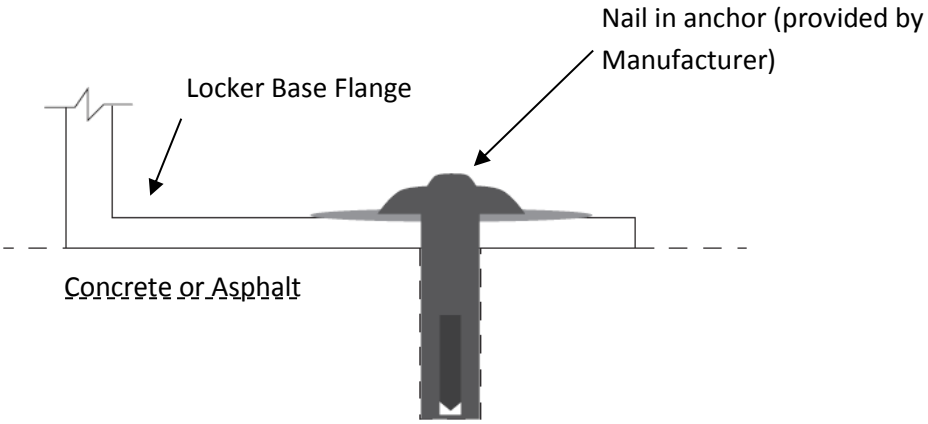

301

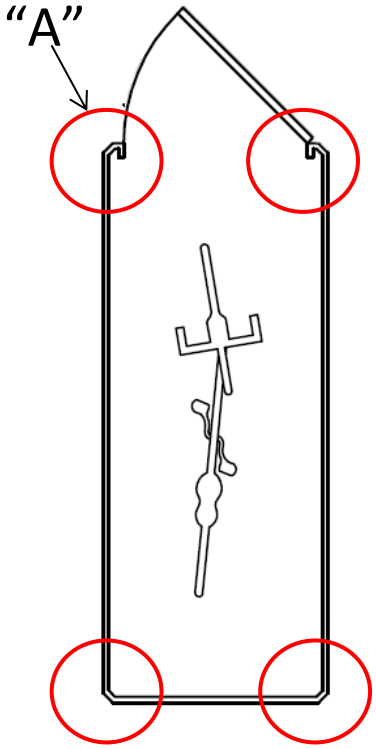

American Bicycle Security Company
P.O. Box 7359
Ventura, CA 93006
Ph: (800) 245-3723 or (805) 933-3688
Fax: (805) 933-1865
www.ameribike.com
Email: turtle@ameribike.com